4. Disassembly and Reassembly

4-1 General Precautions on Disassembly

When you disassemble and reassemble components, you must use extreme caution. The close proximity of cables to moving parts makes proper routing a must. If components are removed, any cables disturbed by the procedure must be restored as close as possible to their original positions. Before removing any component from the machine, note the cable routing that will be affected.

Whenever servicing the machine, you must perform as follows:

1. Check to verify that documents are not stored in memory.

2. Be sure to remove the toner cartridge before you disassemble parts.

3. Unplug the power cord.

4. Use a flat and clean surface.

5. Replace only with authorized components.

6. Do not force plastic-material components.

7. Make sure all components are in their proper position.

Releasing Plastic Latches

Many of the parts are held in place with plastic latches. The latches break easily; release them carefully. To remove such parts, press the hook end of the latch away from the part to which it is latched.

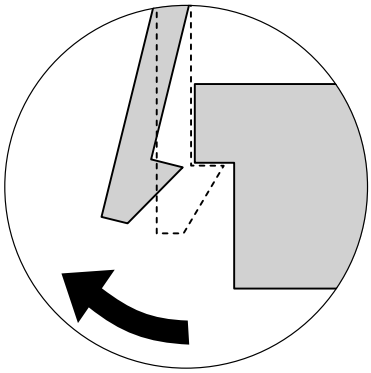

4-2 Cradle

1. Push the lever (①) and remove the cradle as shown below.

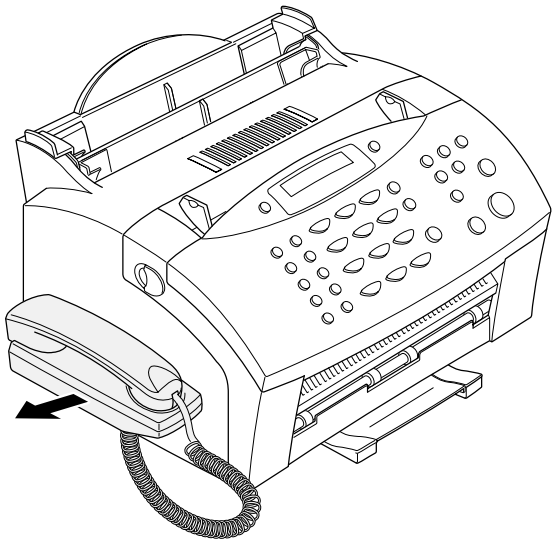

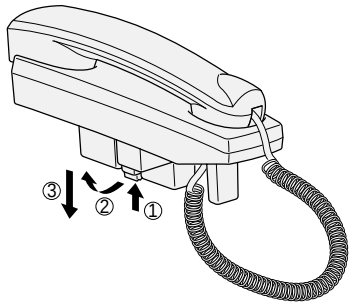

4-3 White Roller

1. Open the OPE cover.

2. Push the bushing on the both ends of the roller slightly inward, then rotate it until it reaches the slot. Then lift the roller out.

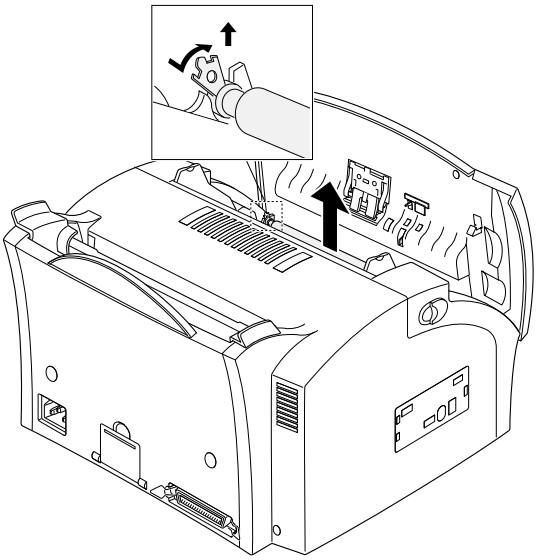

Note: Check the roller for any dirt. If dirty, wipe it off with soft cloth dampened with water. If the roller is heavily worn, replace it with a new one.

4-4 OPE Cover

1. Pull the cover release button on both sides of the machine, and open the front cover.

2. Remove two stoppers holding the front cover unit

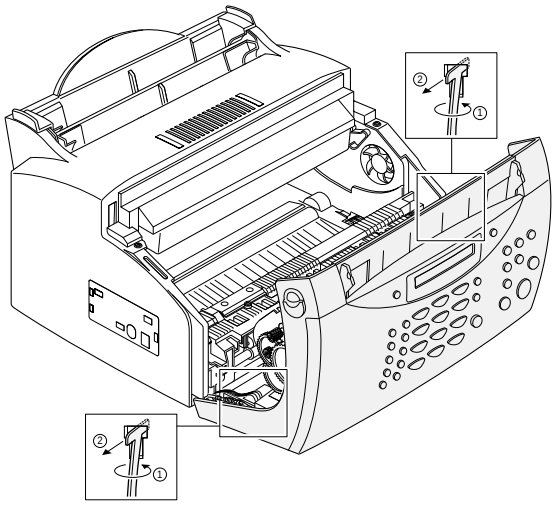

3. Pull the bottom left end of the cover downward to unlatch the front cover unit and remove the cover from the main frame.

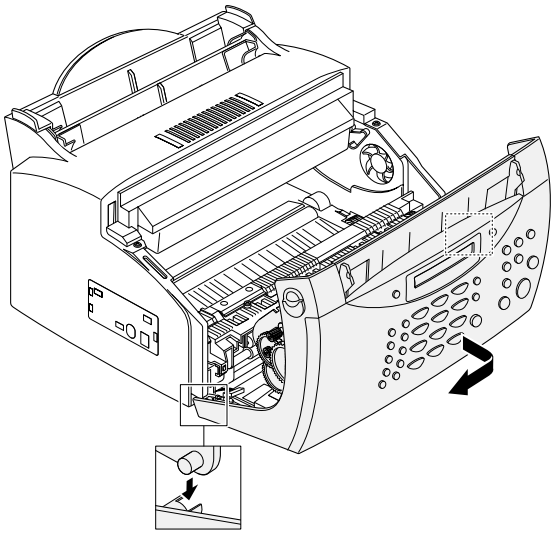

4. Remove two screws securing bracket scan board, then take out the bracket scan board.

5. Unplug two connectors and one wirefrom the scan board

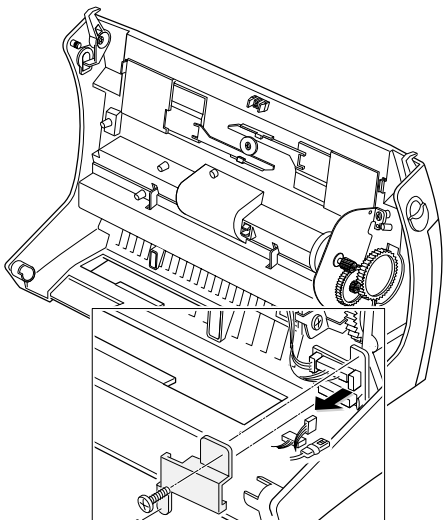

6. Lift the OPE cover.

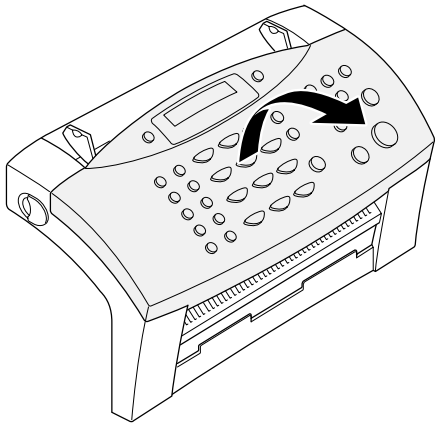

7. Remove the stopper holding the OPE cover.

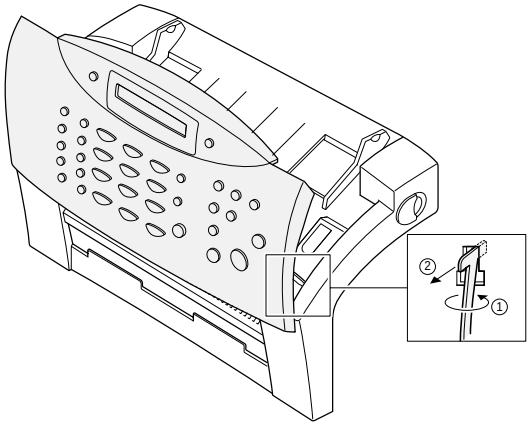

8. Unlatch the bottom ends, then remove the OPE cover.

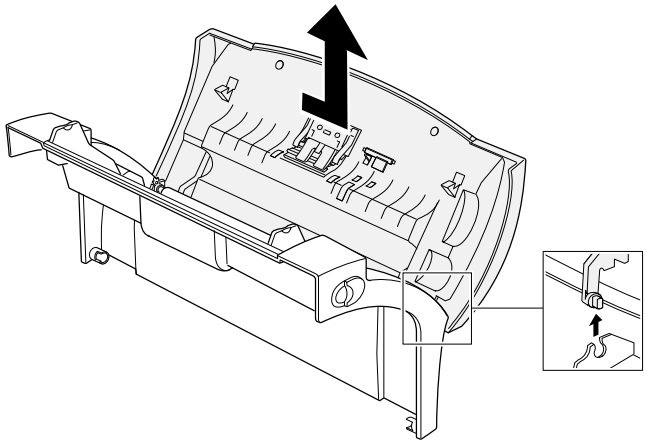

4-5 ADF Rubber

1. Before you remove the ADF rubber, you should remove:

   – OPE cover (see page 4-3)

2. Remove two screws and remove scanner upper frame.

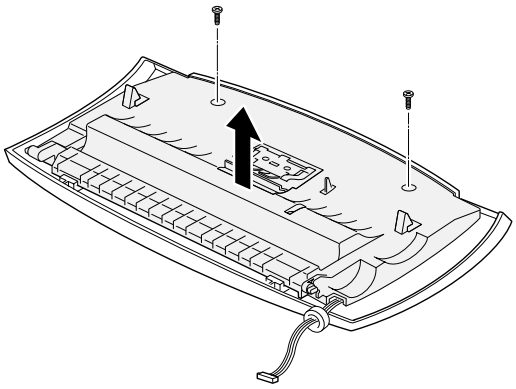

3. Push down and release the latches and remove the ADF rubber.

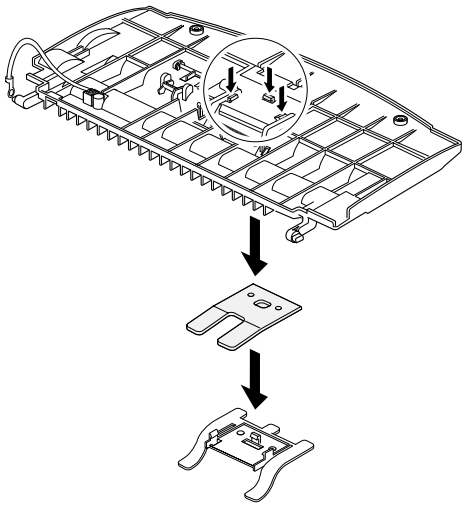

4-6 OPE Board

1. Before you remove the OPE board, you should remove:

   – OPE cover (see page 4-3)

2. Remove four screws securing the OPE board.

3. Release two latches securing the both side of the LCD and the two of four latches securing the board. Then remove the OPE board.

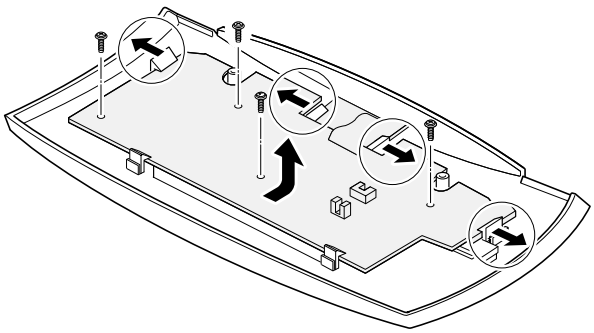

4-7 Lever sensor Doc

1. Unlatch the lever sensor Doc from the scan upper frame and take it out.

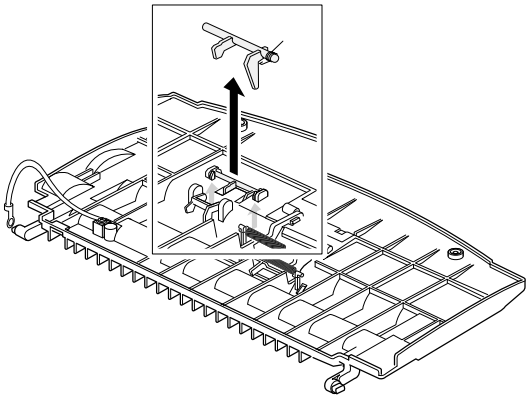

4-8 Lever sensor Scan

1. Push the both sides of Lever sensor Scan inward, then unlatch and take out the sensor Scan from the scan upper frame.

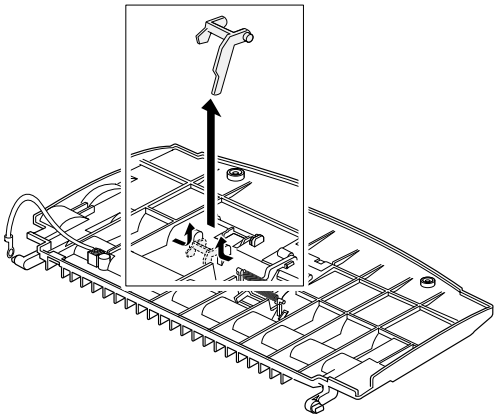

4-9 Scan board

1. Before you remove Scan board, you should remove:

   – Bracket scam board (see page 4-3)

2. Unplug all the connectors from the scan board and remove the board.

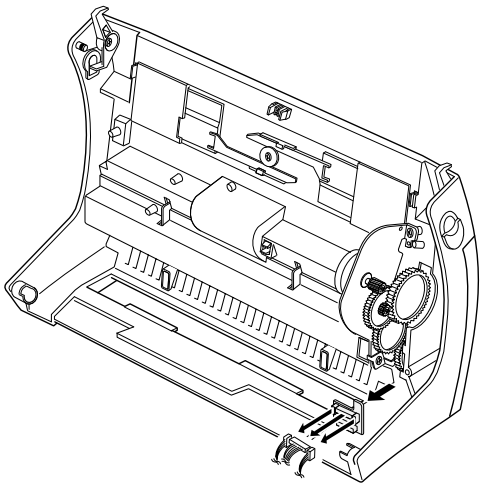

4-10 Scan Motor

1. Before you disassemble Scan motor, you should remove:

   – OPE cover (see page 4-3)
   – Bracket scan board (see page 4-3)

2. Unplug one connector from the scan board.

3. Remove three screws, then remove the motor ass'y from the main frame.

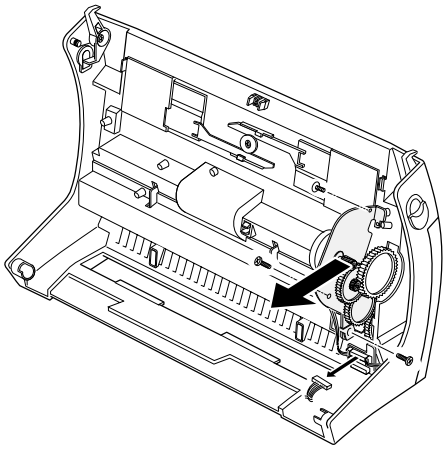

4. Take out the gear from the motor ass'y.

5. Remove two screws and remove the motor.

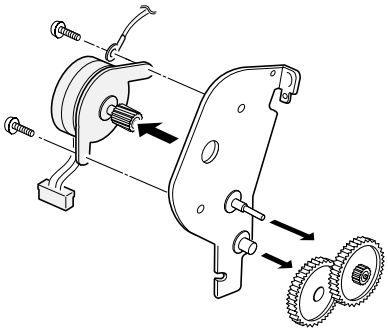

4-11 ADF roller

1. Before you remove the ADF roller, you should remove:

   – OPE cover (see page 4-3)

2. Remove two screws securing the guide paper and remove the guide paper.

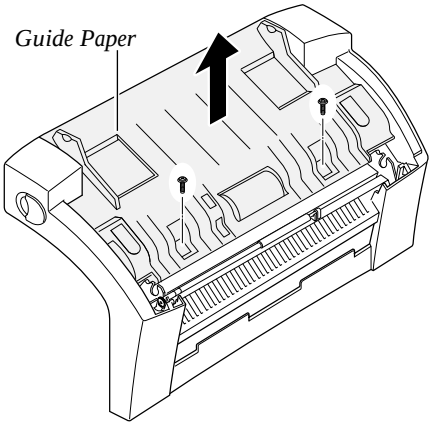

3. Remove ADF roller from the scan front frame.

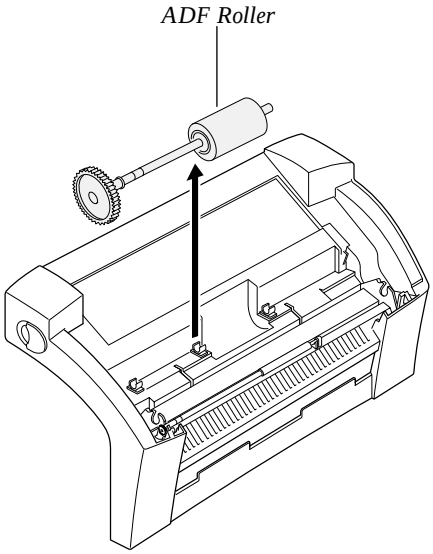

4-12 CIS

1. Push CIS as shown below and lift it to remove from the scan front frame.

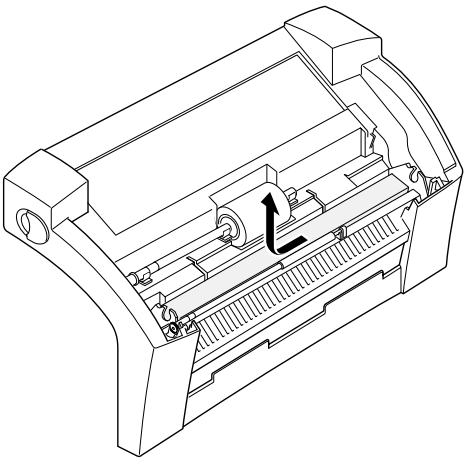

2. Separate the guide CIS from CIS.

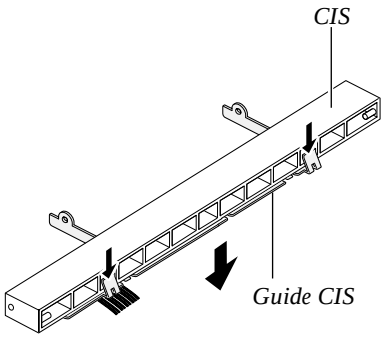

4-13 Rear cover

1. Remove two screws.

2. Push the metal clip on the parallel port down and remove the rear cover from the main frame.

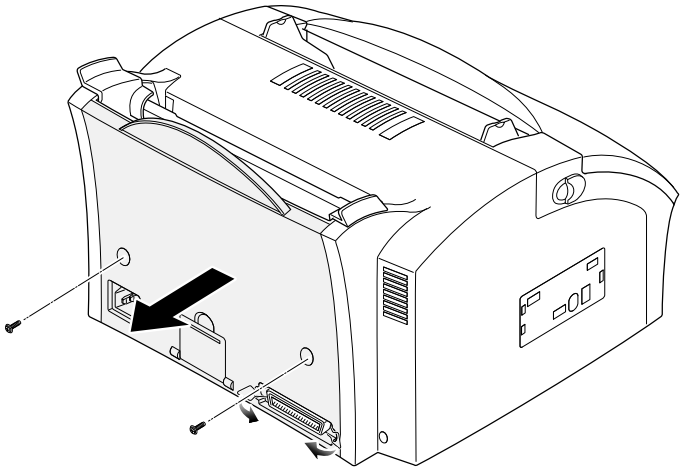

4-14 Top cover

1. Before you remove the ADF roller, you should remove:

   – OPE cover (see page 4-3)
   – Rear cover (see above)

2. Remove two screws securing the top cover from the back side of the machine.

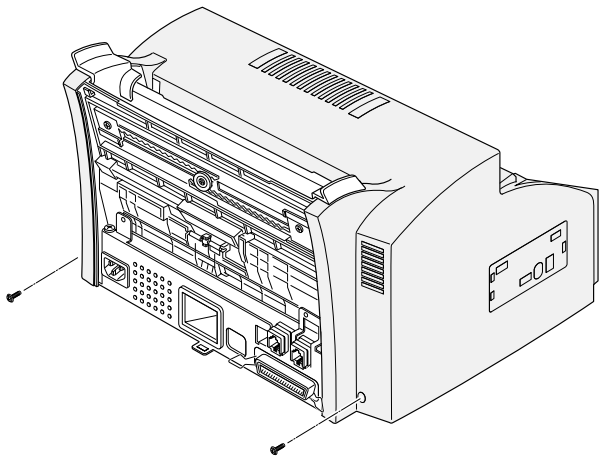

3. Remove two screws and slide the left and right paper guides fully inward. Then spread the bottom of the top cover and lift the cover to remove.

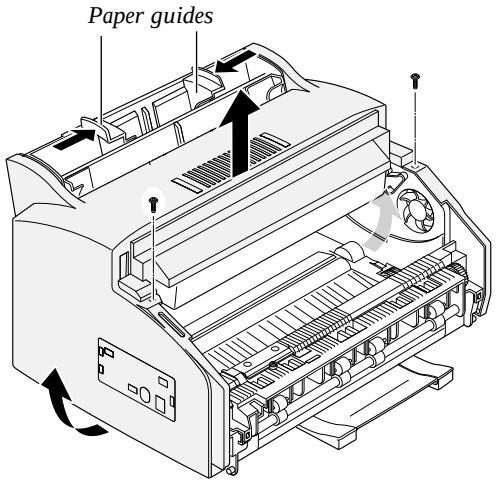

4-15 Tray

1. Before you remove the tray, you should remove:

   – OPE cover (see page 4-3)
   – Rear cover (see page 4-9)
   – Top cover (see page 4-9)

2. Take out the tray from the main frame.

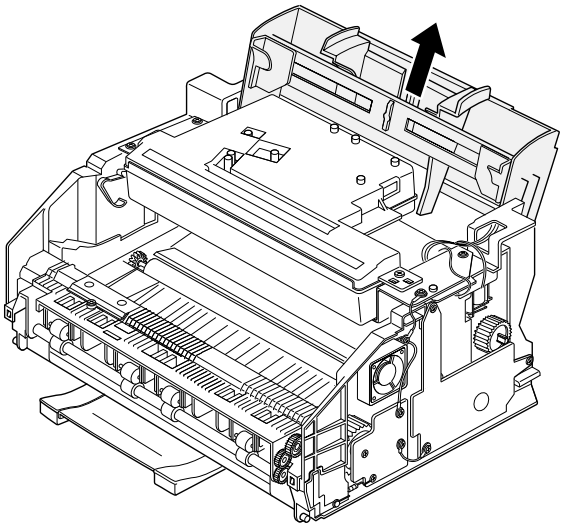

4-16 LSU

1. Before you remove the LSU, you should remove:

   – All covers (see page 4-3, 4-9)

2. Remove three screws securing the LSU.

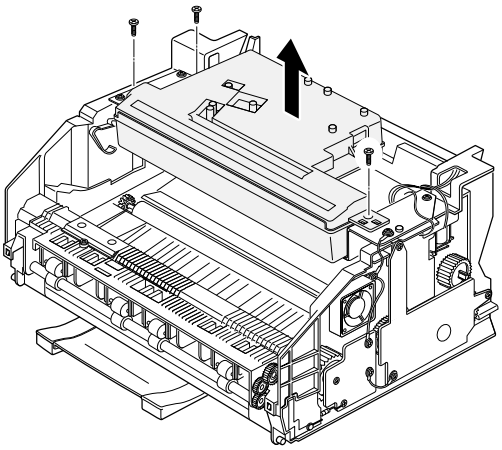

3. Unplug two connectors from the LSU and remove the LSU.

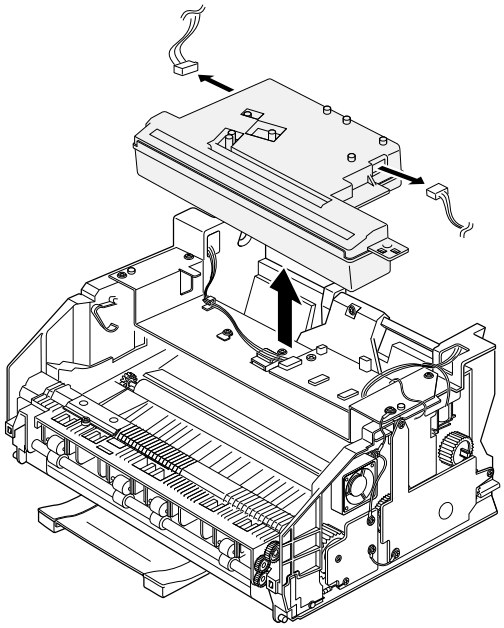

4-17 Transfer roller

1. Pull the cover release button on both sides of the machine, and open the front cover.

2. Lift the transfer roller using a proper tool and take out the roller.

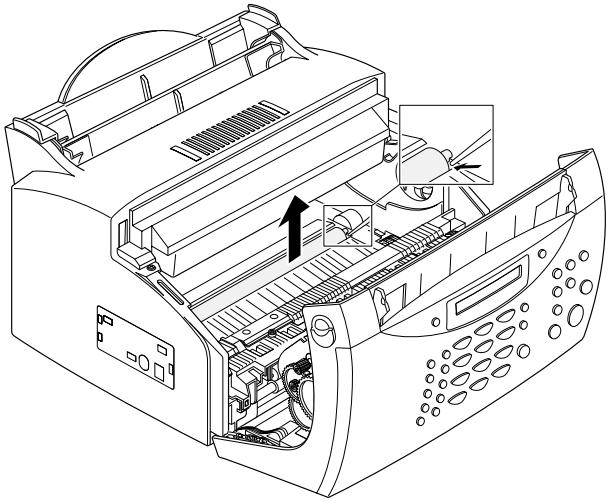

4-18 Engine board

1. Before you remove the Engine board, you should remove:

   – All covers (see page 4-3, 4-9)
   – LSU (see page 4-10)

2. Unplug five connectors and remove one screw from the engine board, then remove the board.

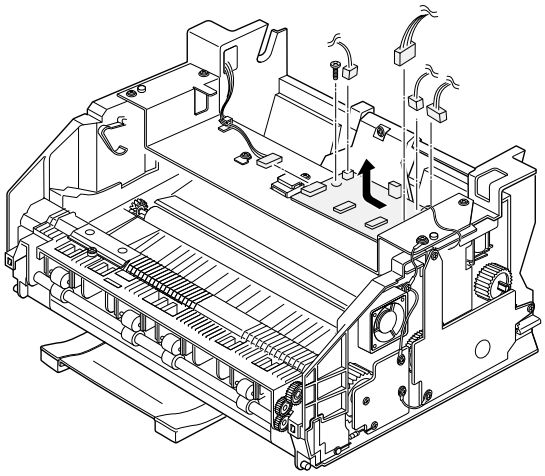

4-19 Pick-up roller ass'y

1. Before you remove the pick-up roller ass'y, you should remove:

   – All covers (see page 4-3, 4-9)
   – LSU (see page 4-10)

2. Unplug all the connectors from the engine board.

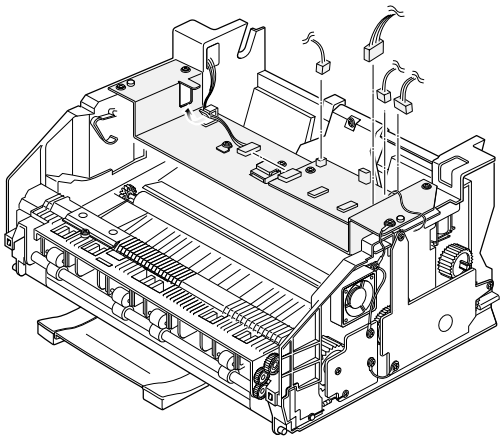

3. Remove four screws securing the plate upper and remove the plate upper as below.

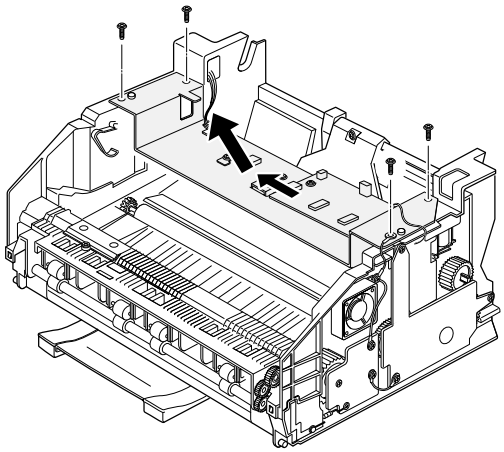

4. Remove two screws and remove the roller from the plate.

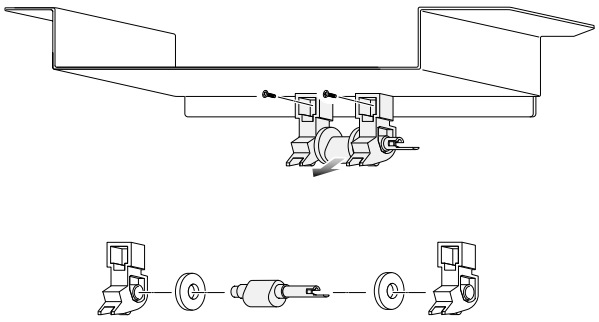

Note: When you reassemble the pick-up roller, make sure that the right end of the pick-up roller fits into the pick-up gear shaft.

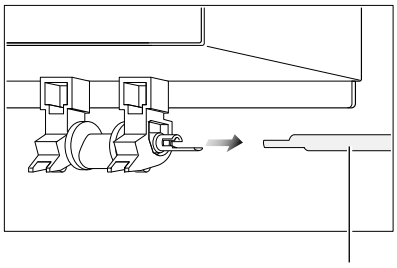

4-20 Knock-up ass'y

1. Before you remove the knock-up ass'y, you should remove:

   – All covers (see page 4-3, 4-9)
   – LSU (see page 4-10)
   – Plate upper (see page 4-12)

2. Pull the knock-up ass'y fully backward.

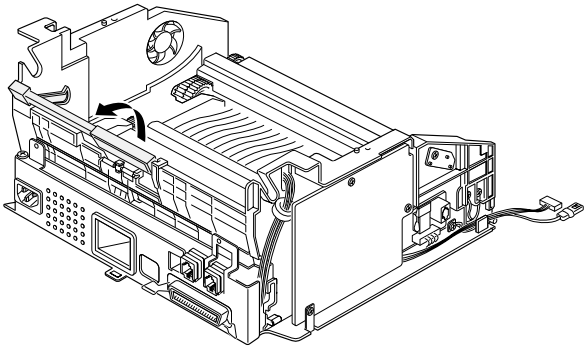

3. Remove the knock-up ass'y from the main frame.

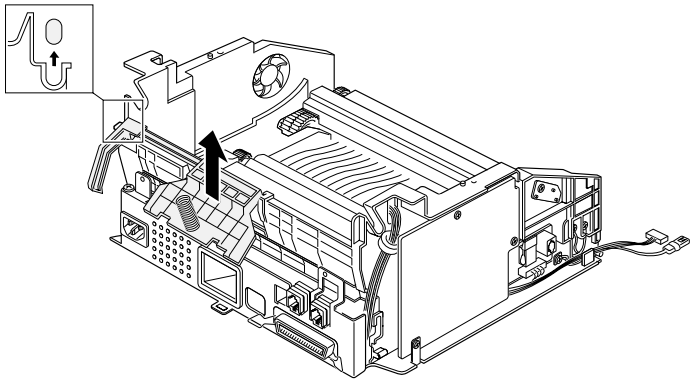

4-21 Cap-pad

1. Before you remove the cap-pad, you should remove:

   – All covers (see page 4-3, 4-5)
   – LSU (see page 4-10)
   – Plate upper (see page 4-12)
   – Knock-up ass'y (see above)

2. Take out the cap-pad from the main frame.

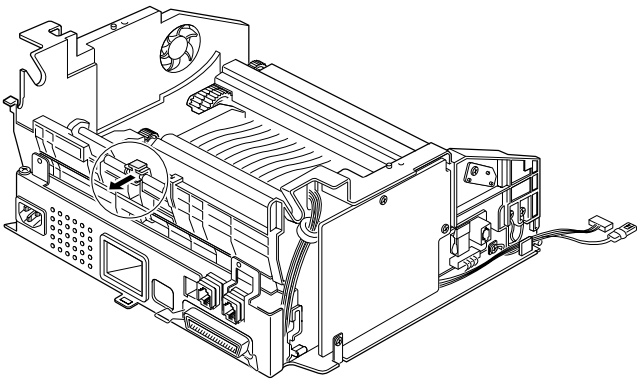

4-22 Holder-pad

1. Before you remove the holder-pad, you should remove:

   – All covers (see page 4-3, 4-9)
   – LSU (see page 4-10)
   – Plate upper (see page 4-12)
   – Knock-up ass'y (see page 4-13)
   – Cap-Pad (see page 4-13)

2. Remove the holder-pad from the main frame.

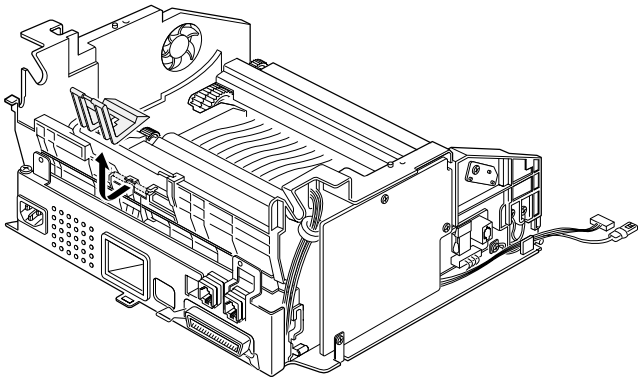

4-23 Motor ass'y

1. Before you remove the motor ass'y, you should remove:

   – All covers (see page 4-3, 4-9)

2. Remove five screws securing the motor ass'y and unplug one connector from the engine board, then remove the motor ass'y.

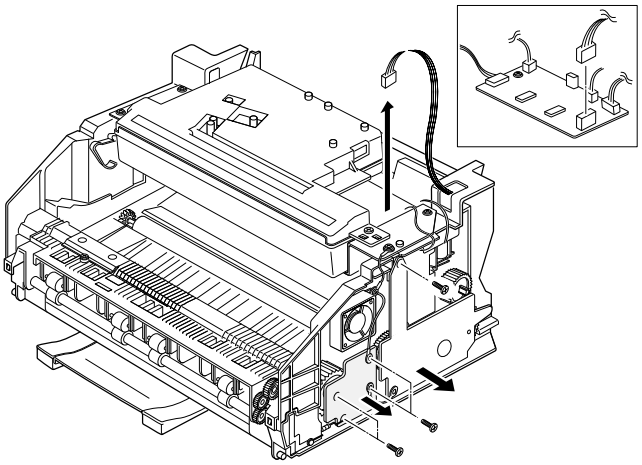

Note: When you reassemble the motor ass'y, make sure that the bosses shown in the figure below fit into the corresponding screw holes on the motor ass'y to allow the screws to be fastened properly.

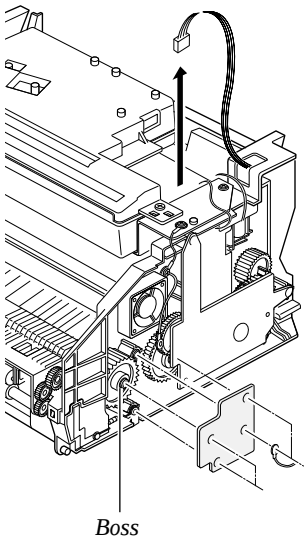

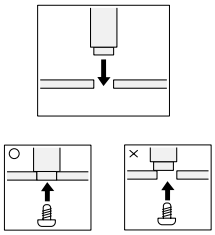

4-24 Fan

1. Before you remove the fan, you should remove:

   – All covers (see page 4-0)
   – Motor ass'y (see page 4-15)

2. Unplug one connector from the engine board and remove the fan.

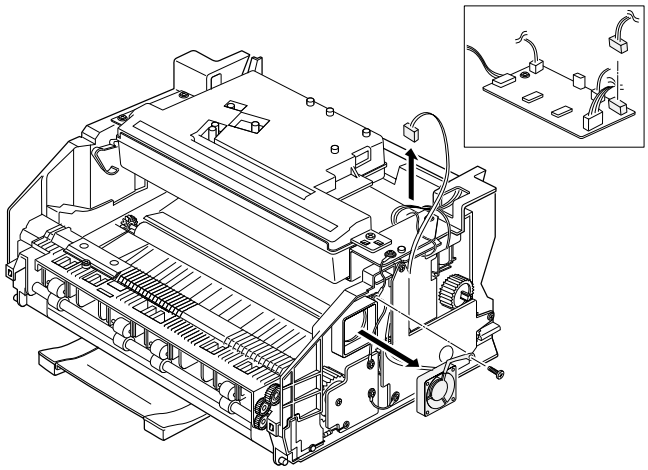

4-25 Gear pick-up ass'y

1. Before you remove the gear pick-up ass'y, you should remove:

   – All covers (see page 4-3, 4-9)

Note: When reassembling, make sure that the direction of the gear is correct.

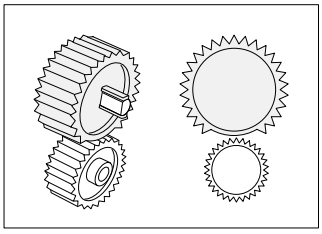

2. Release two snap-fits and remove the gear pick-up ass'y from the main frame.

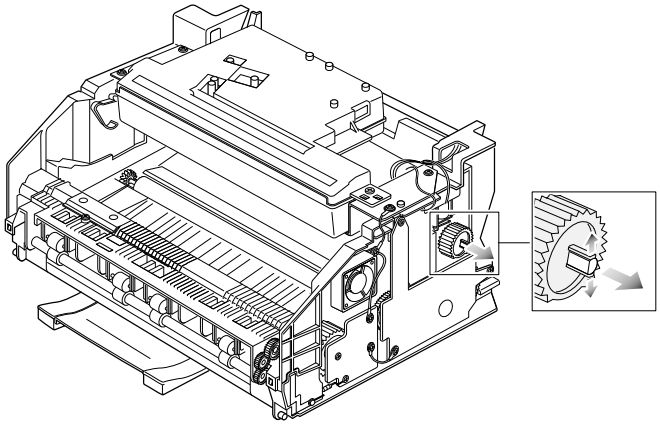

4-26 Solenoid

1. Before you remove the solenoid, you should remove:

   – All covers (see page 4-3, 4-9)

2. Unplug one connector from the engine board and remove one screw, then remove the solenoid.

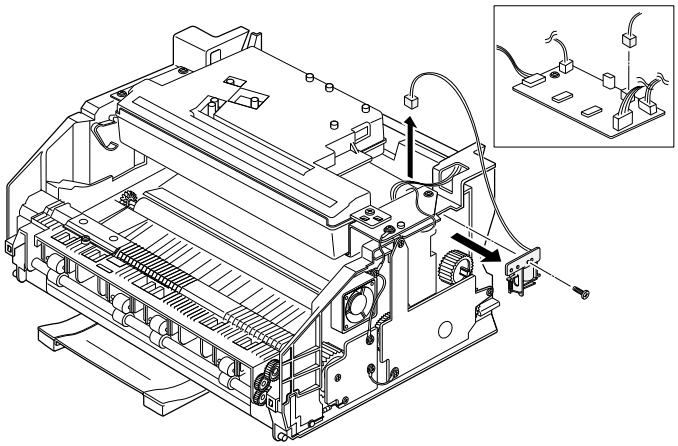

4-27 HVPS board

1. Before you remove the HVPS board, you should remove:

   – All covers (see page 4-3, 4-9)

2. Remove three screws and one connector from the HVPS board, then remove the board.

Note: when reassembling, make sure that the terminal is five.

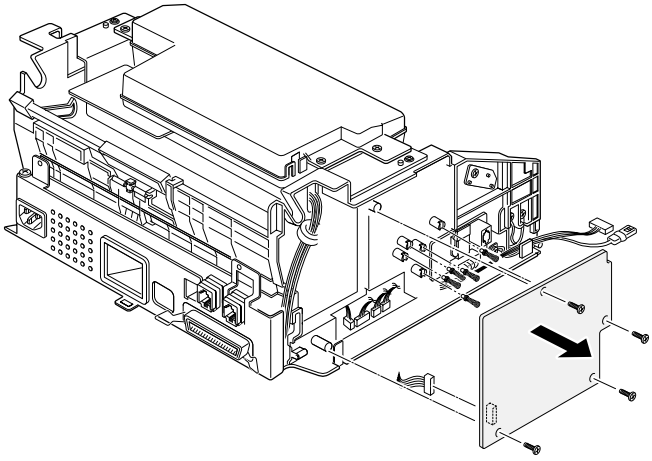

4-28 Hook board

1. Before you remove the hook board, you should remove:

   – All covers (see page 4-3, 4-9)

2. Unplug one connector from the main board and remove two screws, then remove the hook board from the main frame.

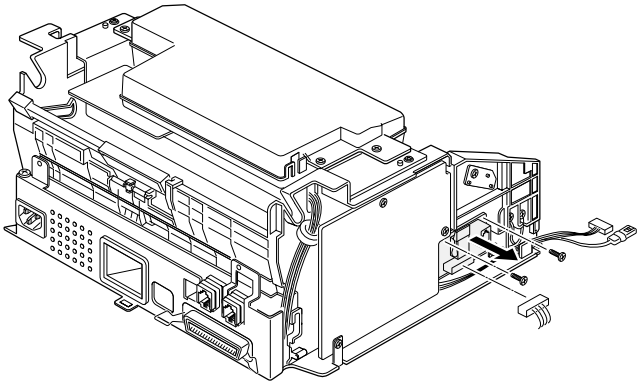

4-29 Fuser ass'y

1. Before you remove the fuser ass'y, you should remove:

   – All covers (see page 4-3, 4-9)

2. Remove four wires after remove two screws from the main frame and one connector from the inter connector.

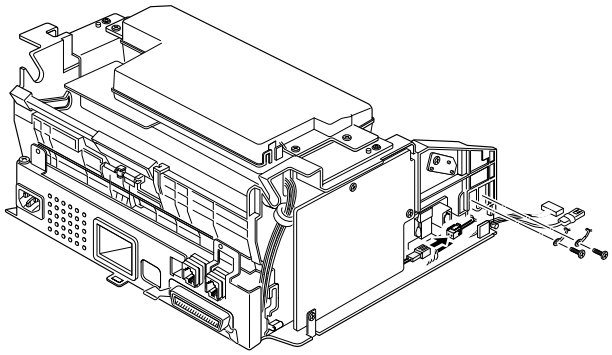

3. Remove two screws and unlatch the fuser ass'y using a proper tool.

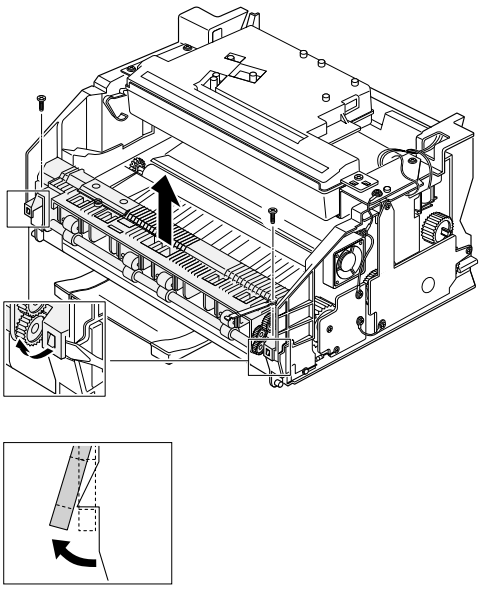

4-30 Pressure roller

1. Before you remove the pressure roller, you should remove:

   – All covers (see page 4-3, 4-9)
   – Fuser ass'y (see page 4-17)

2. Lift and remove the pressure roller from the main frame.

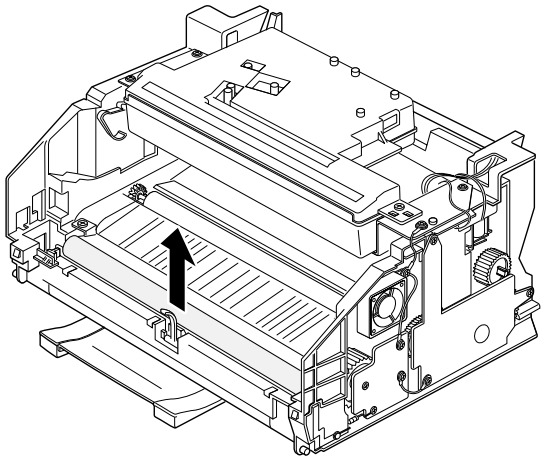

4-31 Actuator-exit

1. Before you remove the actuator-exit, you should remove:

   – All covers (see page 4-3, 4-9)
   – Fuser ass'y (see page 4-17)

2. Lift and remove the actuator-exit from the main frame.

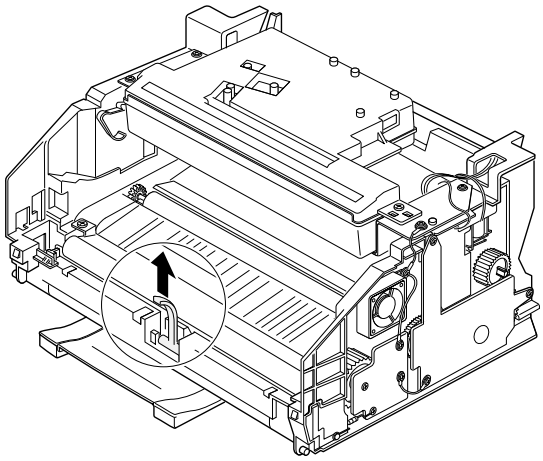

4-32 Thermostat

1. Remove one screw and remove the cover thermostat from the fuser ass'y.

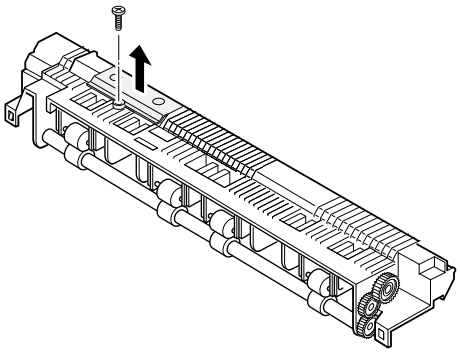

2. Remove two screws and take out thermostat from the fuser ass'y.

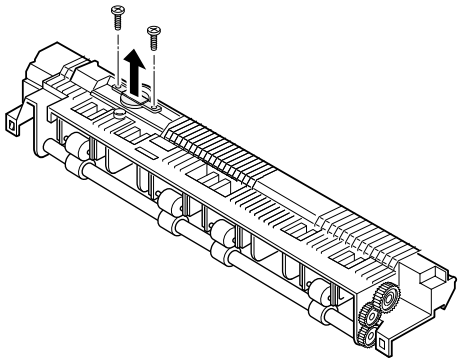

4-33 Shield Engine ass'y

1. Before you remove the shield engine ass'y, you should remove:

   – Rear cover (see page 4-9)

2. Remove four screws securing the shield engine ass'y and remove the shield engine ass'y from the main frame.

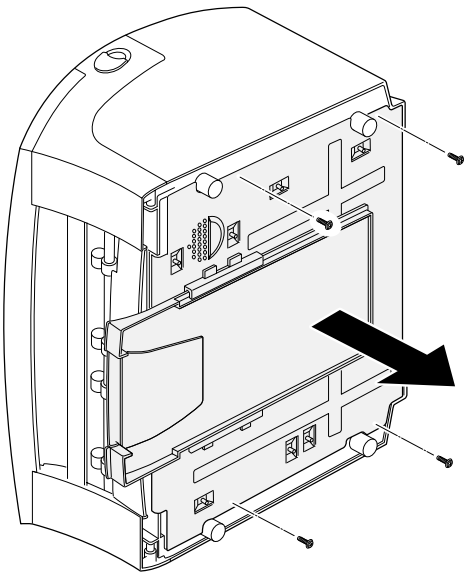

4-34 SMPS board

1. Before you remove the SMPS board, you should remove:

   – Rear cover (see page 4-9)
   – Shield Engine ass'y (see page 4-19)

2. Remove four screws and three connectors, then remove the SMPS board from the main frame.

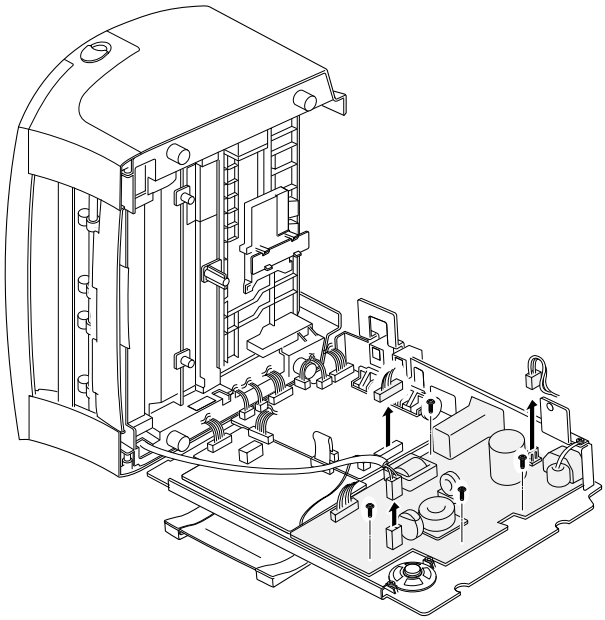

4-35 Speaker

1. Before you remove the speaker, you should remove:

   – Rear cover (see page 4-9)
   – Shield Engine ass'y (see page 4-19)
   – SMPS board (see above)

2. Remove one connector that connects the speaker to the main board and two screws securing the speaker, then remove the speaker.

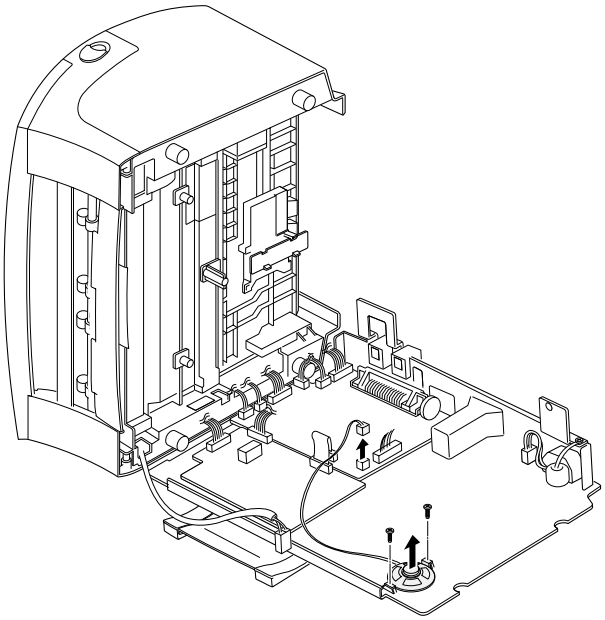

4-36 LIU board

1. Before you remove the LIU board, you should remove:

   – Rear cover (see page 4-9)
   – Shield Engine ass'y (see page 4-19)

2. Remove three screws and three connectors from the LIU board, then remove the board from the main frame.

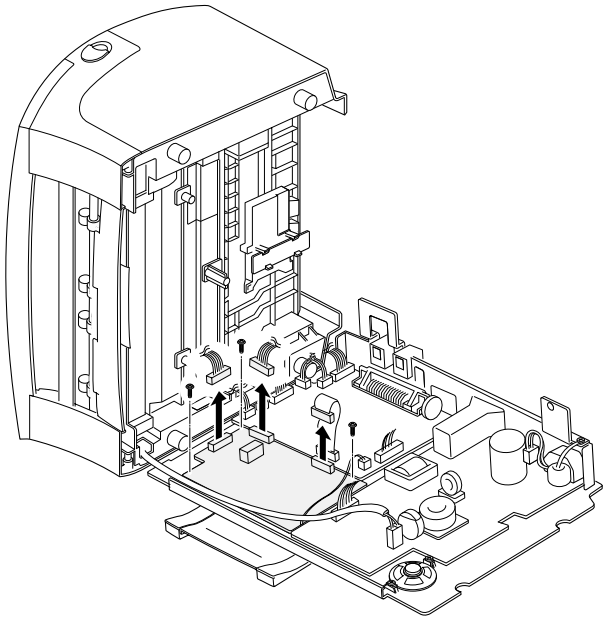

4-37 Main board

1. Before you remove the main board, you should remove:

   – Rear cover (see page 4-9)
   – Shield Engine ass'y (see page 4-19)

2. Remove four screws and all the connectors (9) from the main board, then remove the board.

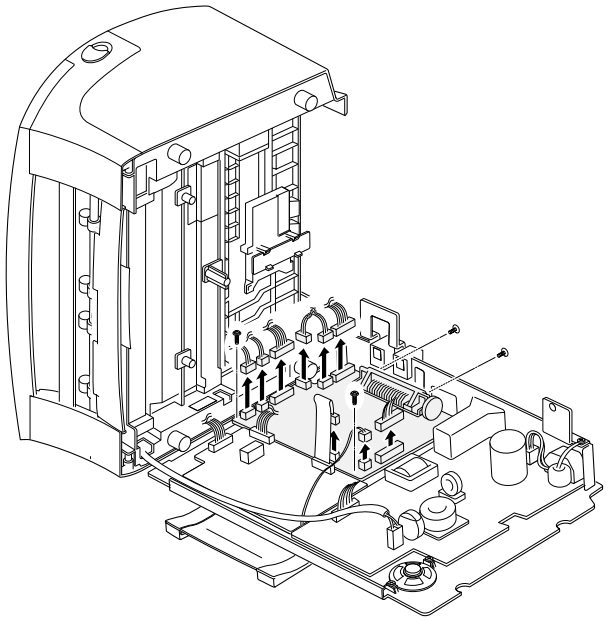

4-38 Sensor board

1. Before you remove the sensor board, you should remove:

   – Rear cover (see page 4-9)
   – Shield Engine ass'y (see page 4-19)

2. Release four snap-fits securing the sensor board and unplug one connector from the main board, then remove the sensor board.

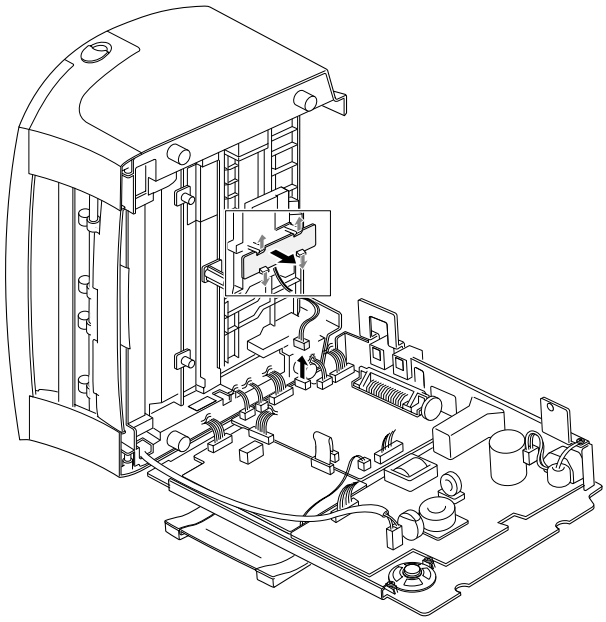

4-39 Actuator Empty/Feeder

1. Before you remove the actuator empty / feeder, you should remove:

   – Rear cover (see page 4-9)
   – Shield Engine ass'y (see page 4-19)

2. Remove one connector from the main board and two screws securing the holder feed ass'y, then remove the holder feeder ass'y.

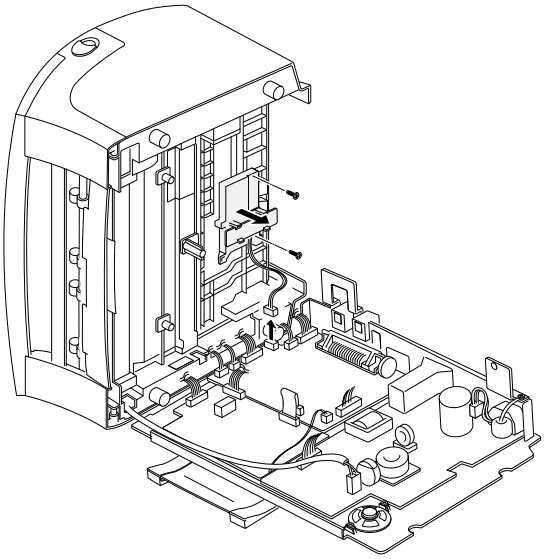

3. Remove the Feed sensor and the Empty sensor.

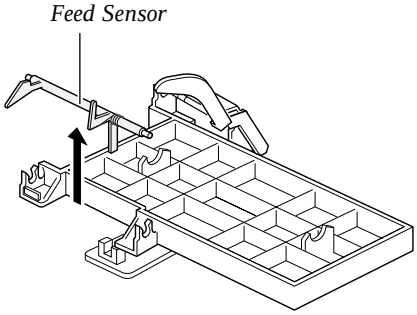

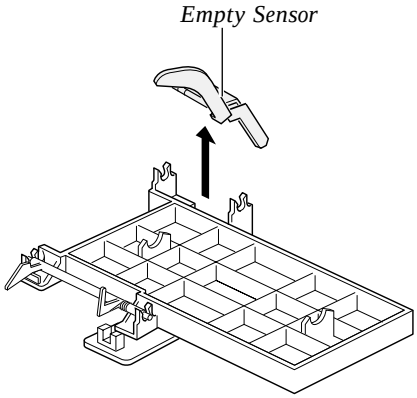

4-40 Roller Feeder

1. Before you remove the actuator empty / feeder, you should remove:

   – All covers (see page 4-0)
   – Motor ass'y (see page 4-15)

2. Release two snap-fits and remove the gear-feed, clutch-feed, and the spring-cluch.

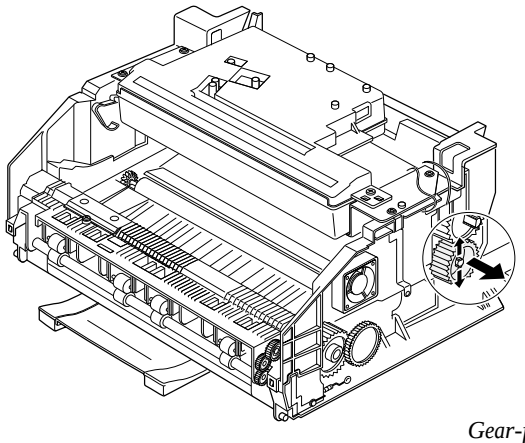

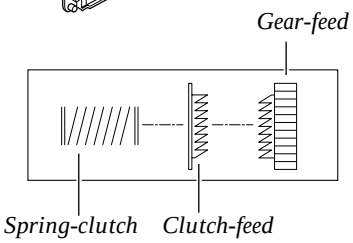

2. Rotate the pick-up bushing as shown below and remove holder feeder ass'y and roller feeder.

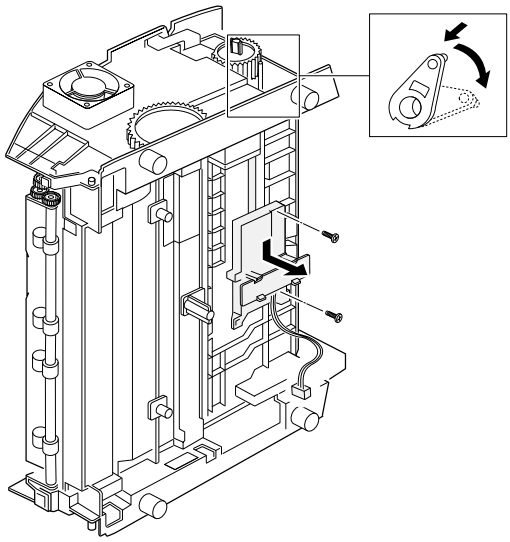

3. Separate the roller feeder from the holder feeder ass'y.

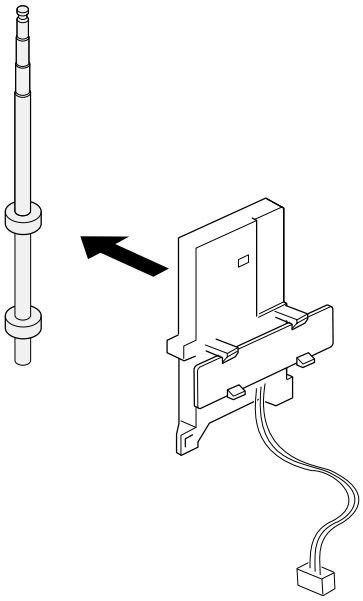

Memo